Investigation of the Local Time Stepping (LTS) approach for Lagrangian Particle simulations

Martin Becker and Dr. Ulrich Heck

DHCAE Tools UG

Motivation

- Simulation of a quenching device
- Quench: cooling of flue gas from a toxic waste incineration plant

  → the gas is very toxic and must be cleaned

  → the gas is very hot (more than 1200 K)

  → it must be cooled down before gas scrubbing
- Water droplets are injected and the evaporative cooling effect is used.

How does the Quench look like?

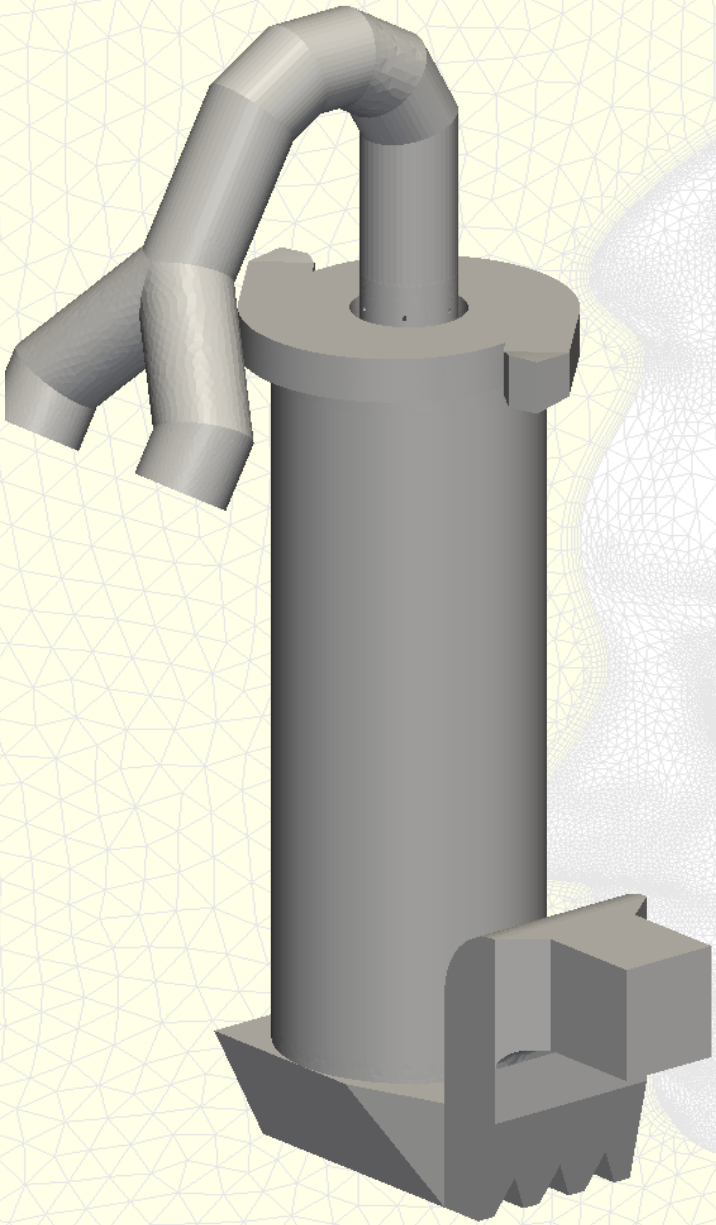

Flow channel dimensions

- Height: 19.0m
- Diameter: 7.0m
- Outlet: 3.0m x 3.0m

How does the Quench work?

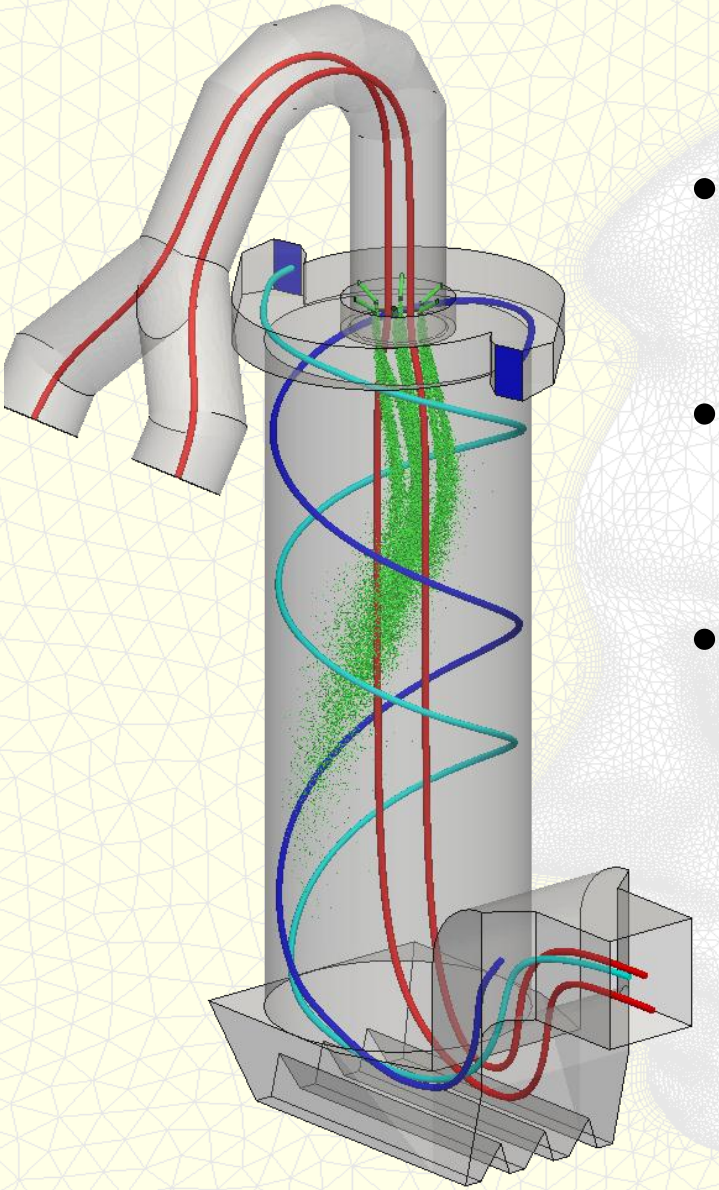

- Hot flue gas (red tubes): 363.500 m³/h
- Water (green droplets): 25.000 l/h
- Additional air stream (light and dark blue) for stabilizing flue gas and droplets

The Quench in action

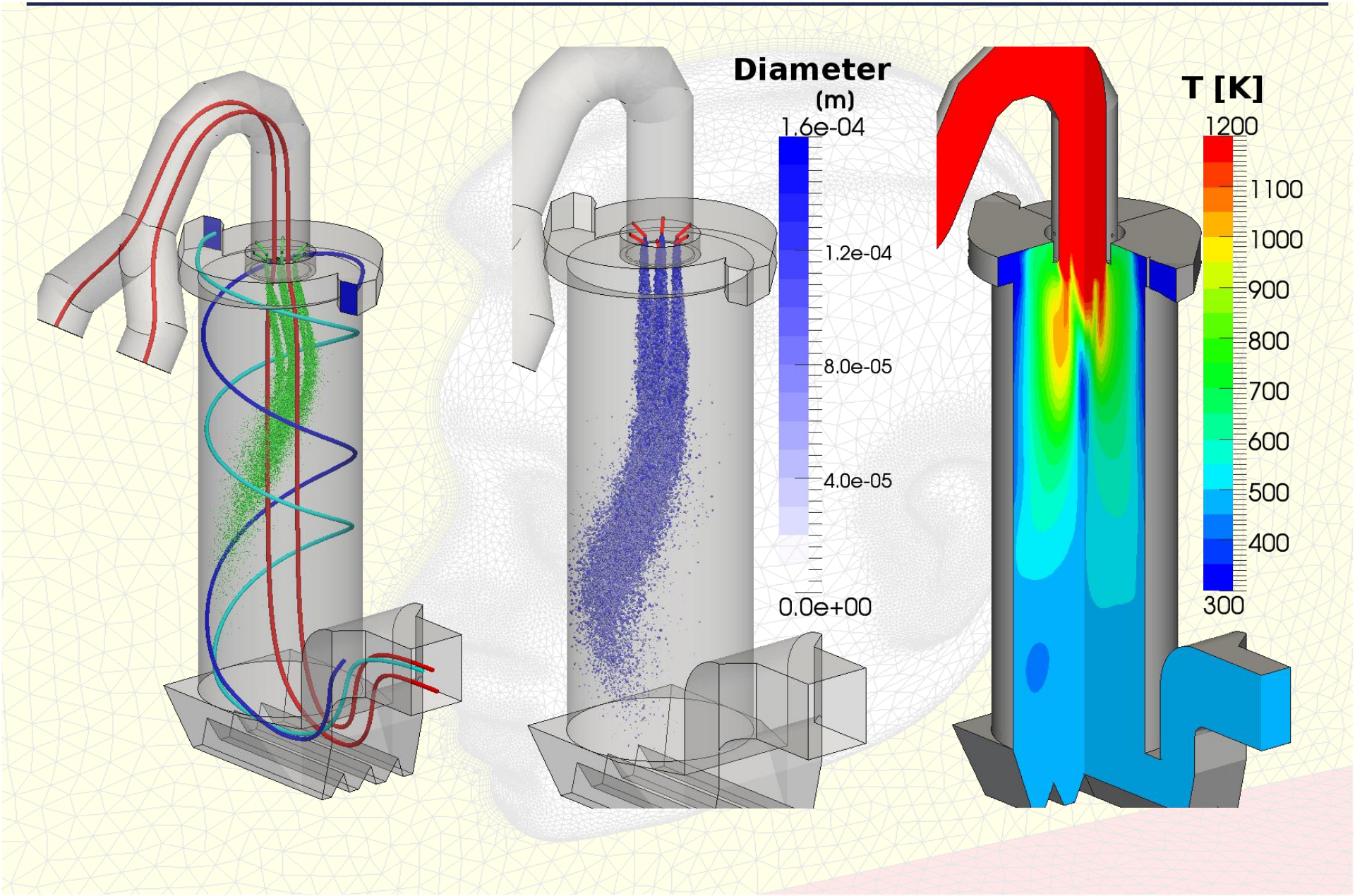

Solver requirements

- Water droplets are modelled as Lagrangian particles
  - There is momentum coupling
  - and strong coupled thermal interaction.
  - The evaporation of droplets causes
    - evaporative cooling effect and
    - mass transfer from dispersed to continuous phase
- Multi species fluid modelling is necessary (water vapor, air, flue gas)
- Some kind of acceleration technique!

Fixed global time step

PISO algorithm needs maximal Courant number maxCo < 1 (CFL condition)

$$Co = \frac{|u| \cdot \Delta t}{\Delta x}$$

Fixed Δt for the complete domain and the complete simulation.

Problem: „The smallest cell with the highest velocity determines the time step!“

PISO/PIMPLE time step

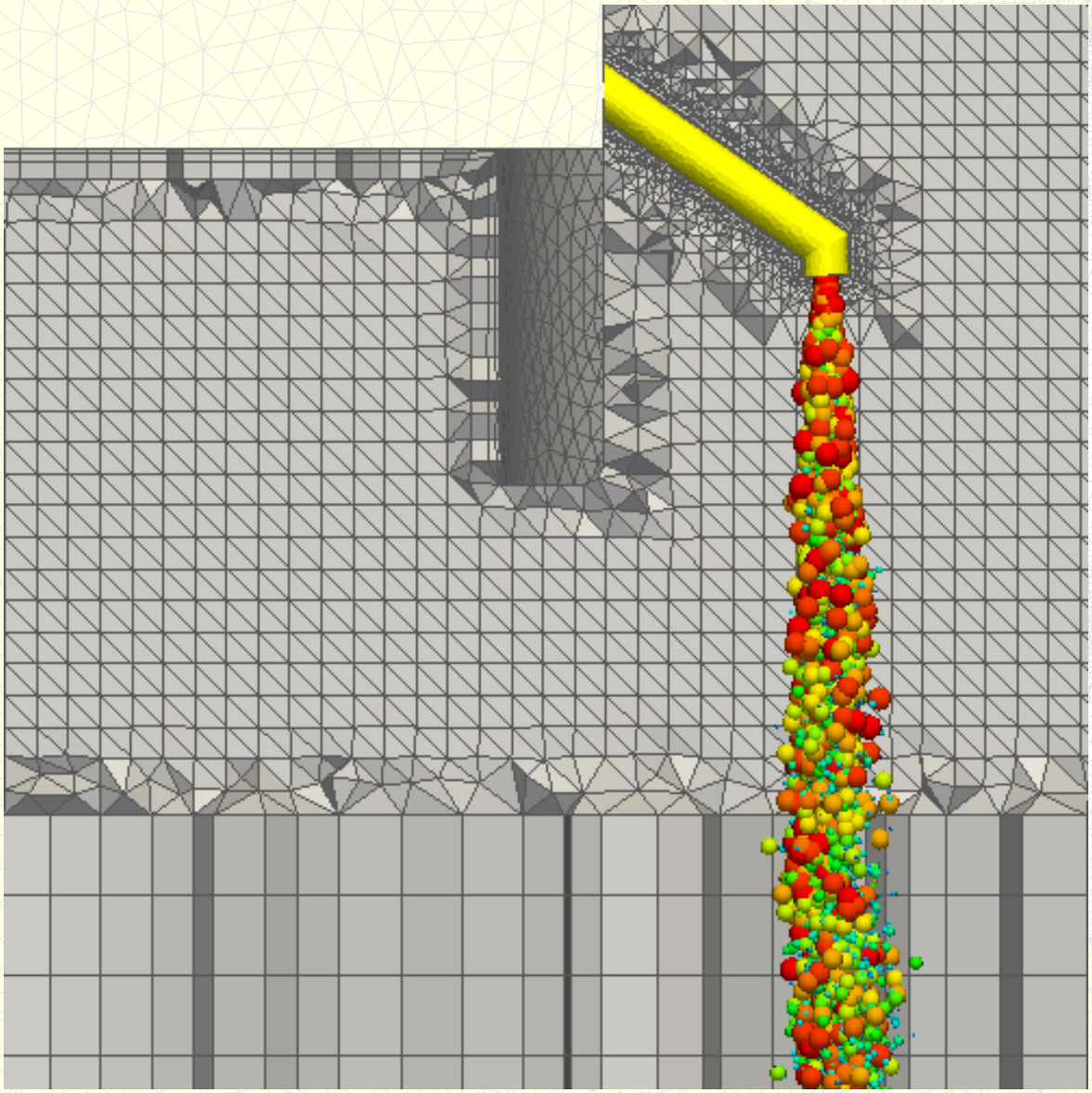

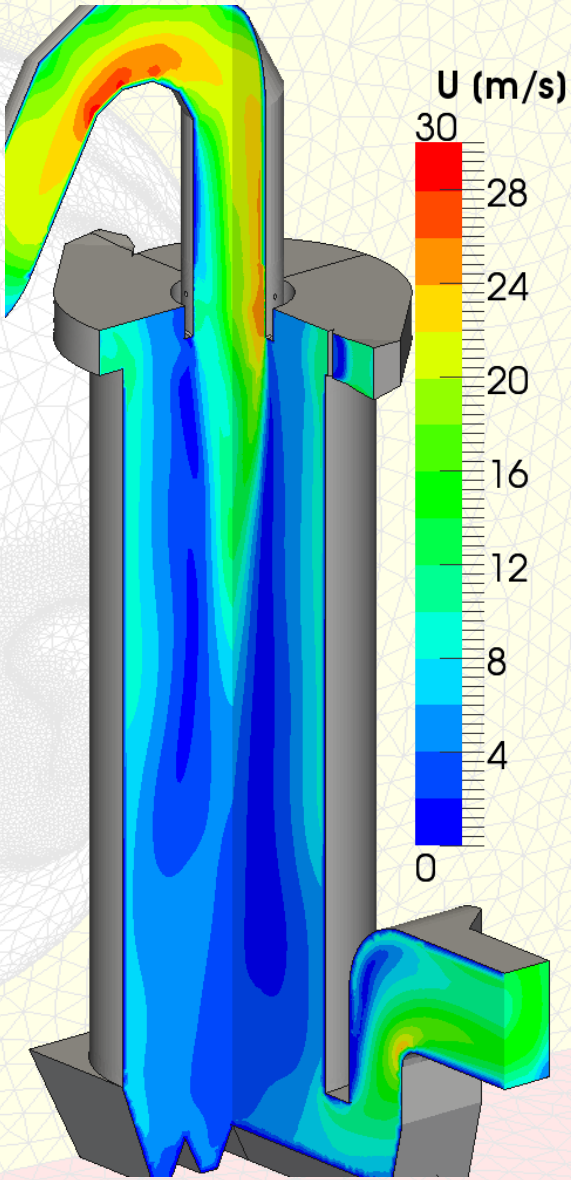

Adaptive time step

Many OpenFOAM solvers use adaptive time steps as a function of maxCo:

$$\Delta t^{(n+1)} = \min\left(\frac{maxCo \cdot \Delta x_i}{|u_i^{(n)}|}\right)$$

Each iteration uses a new global Δt for the complete computational domain.

That is better but far from optimal!

Local Time Stepping (LTS)

- Using a global maxCo instead of global Δt
- Using an individual Δt_i for each cell:

$$\Delta t_i^{(n+1)} = \frac{maxCo \cdot \Delta x_i}{|u_i^{(n)}|}$$

- Each cell is „operated“ with the maximal allowed time step!
- Example: With a maxCo of 0.2 the information of the flow field is transported through any cell in the mesh in 5 steps.

Simplified quenching device

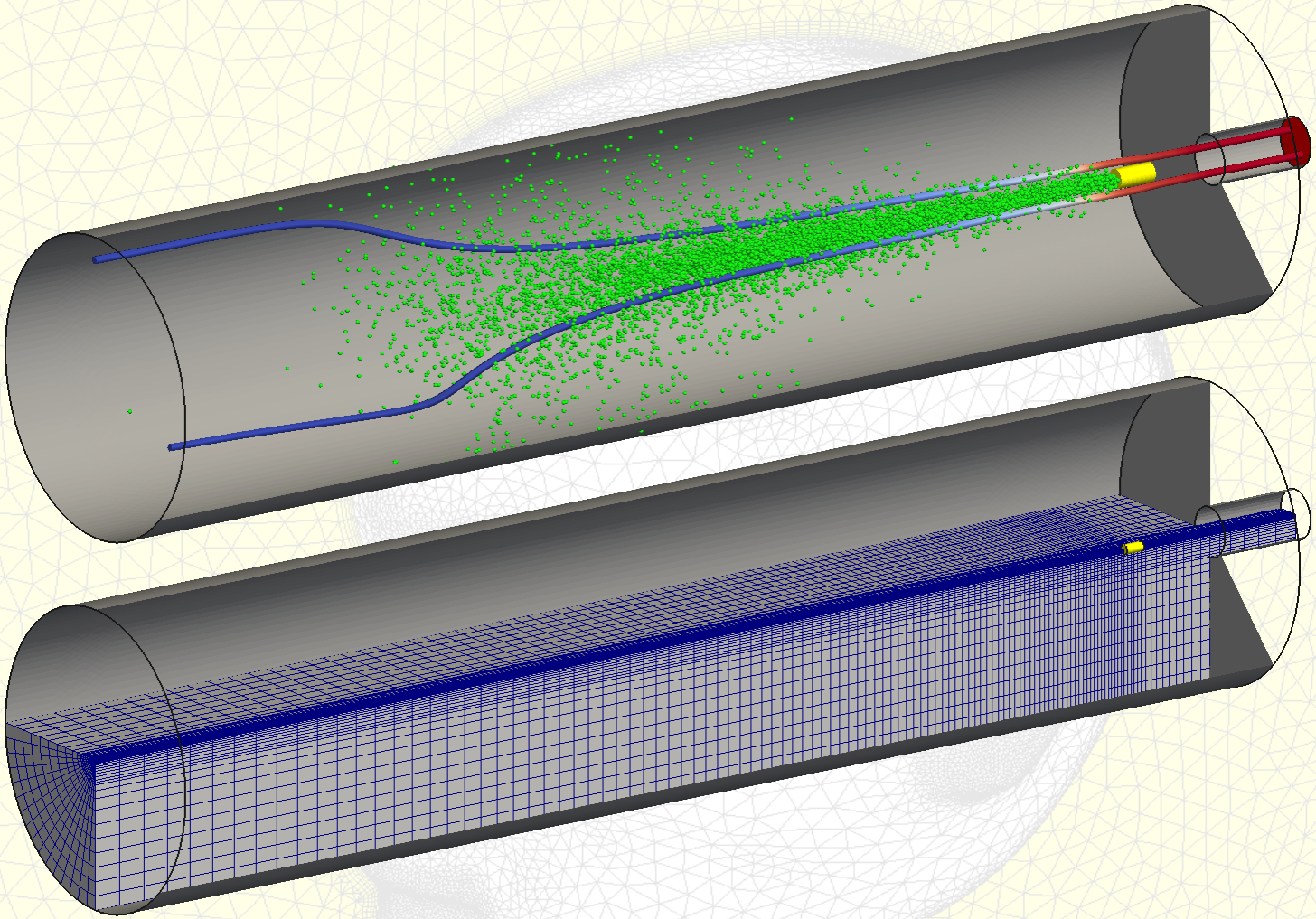

Needs less time and allows excellent hex mesh.

LTS principle

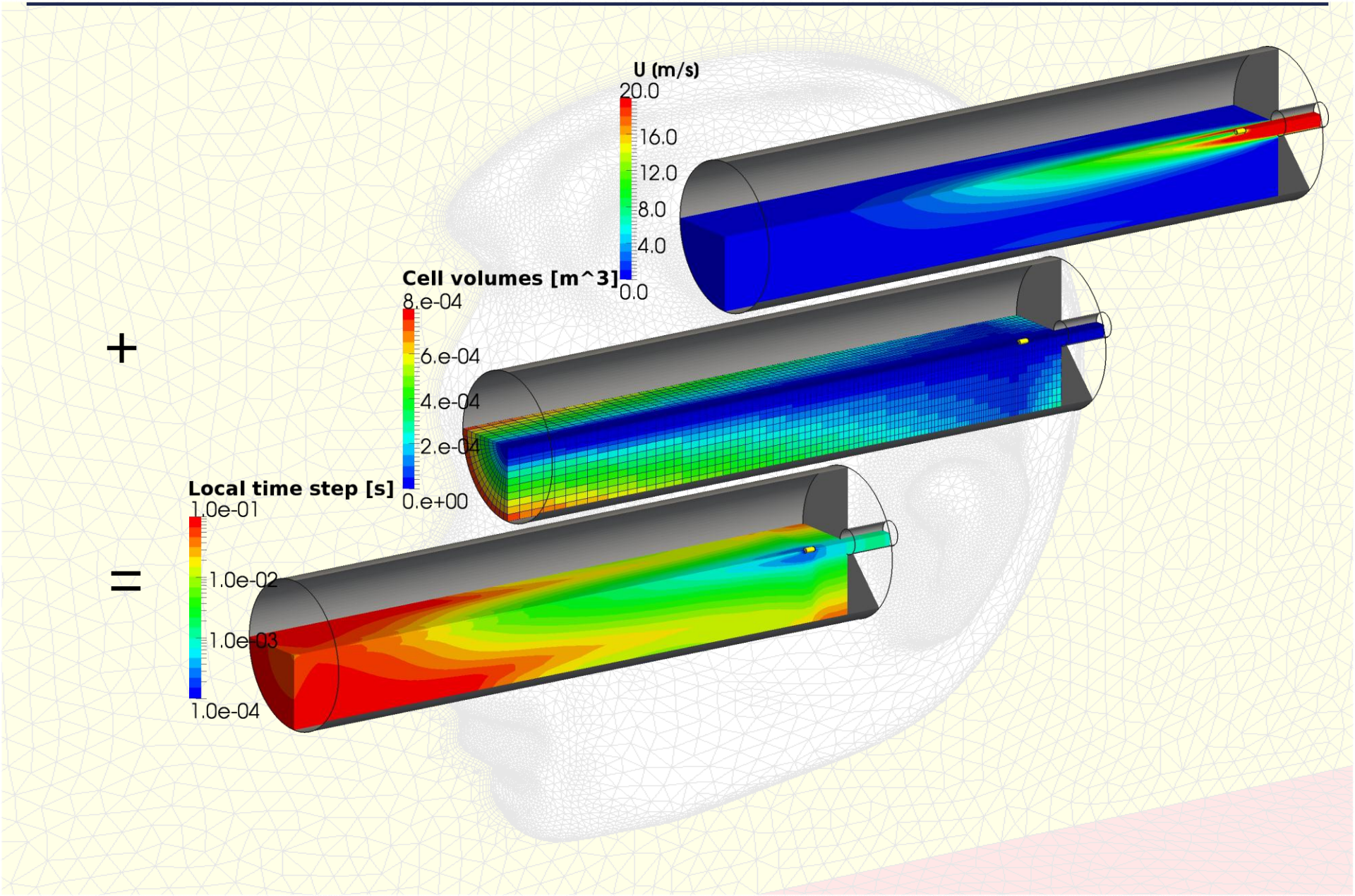

Particle tracking in the LTS solver

- Particle tracking can be done with LTS!
- A rather small number of droplets are injected in each iteration.
- The droplets are tracked within this iteration until complete evaporation (or exiting the computational domain).
- The particle momentum source terms, mass source terms etc. are aggregated in each cell.

LTS vs PISO results

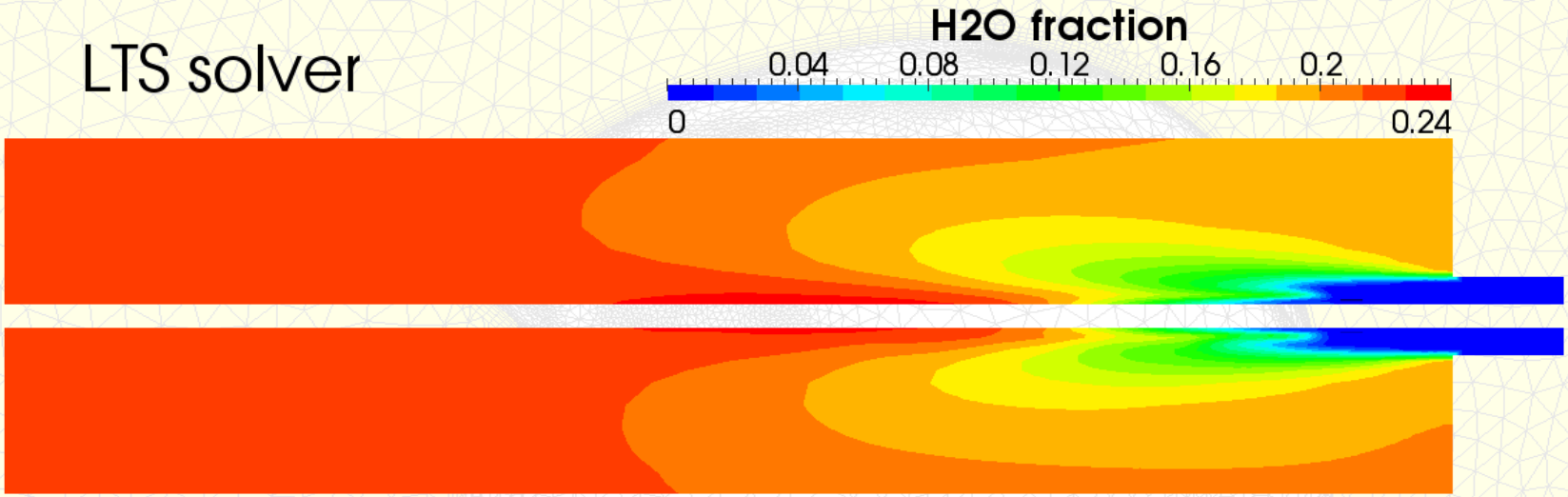

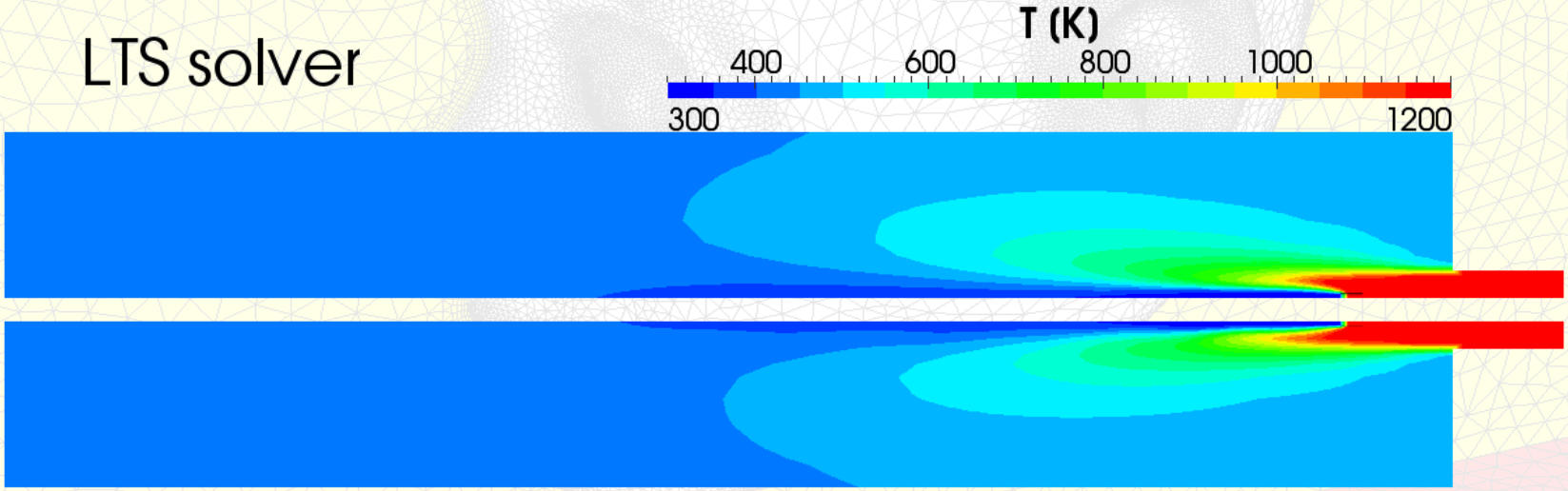

LTS vs PISO, computational times

Mesh type	#Cells	LTS-Solver	PISO-Solver	t_LTS/t_PISO
Simplified Quench **2D Wedge**	~1,000	600s 10 min	10620s 02:57 h	**<6%**
Simplified Quench **3D Hexahedral**	~10,000	1750s 30 min	48510s 13:28 h	**<4%**
Complete Quench **Hybrid Mesh**	~2,600,000	3 days	Estimation: 1 year	

Major drawbacks of LTS solver

- No useful particle data for visualization since all droplets evaporate within each iteration!
- Only applicable when steady state solution exists!
- Results are valid only after reaching steady state solution; there might be unphysical conditions during simulations progressing.

Combination of LTS and PISO

- Idea: initialization with LTS solver, continued simulation with PISO solver.
- Can save a lot of time for the PISO solver.
- Verification opportunity: PISO solver should not give different results.
- Visualization: PISO solver provides excellent data for particle visualization.

Continued simulation, Quench

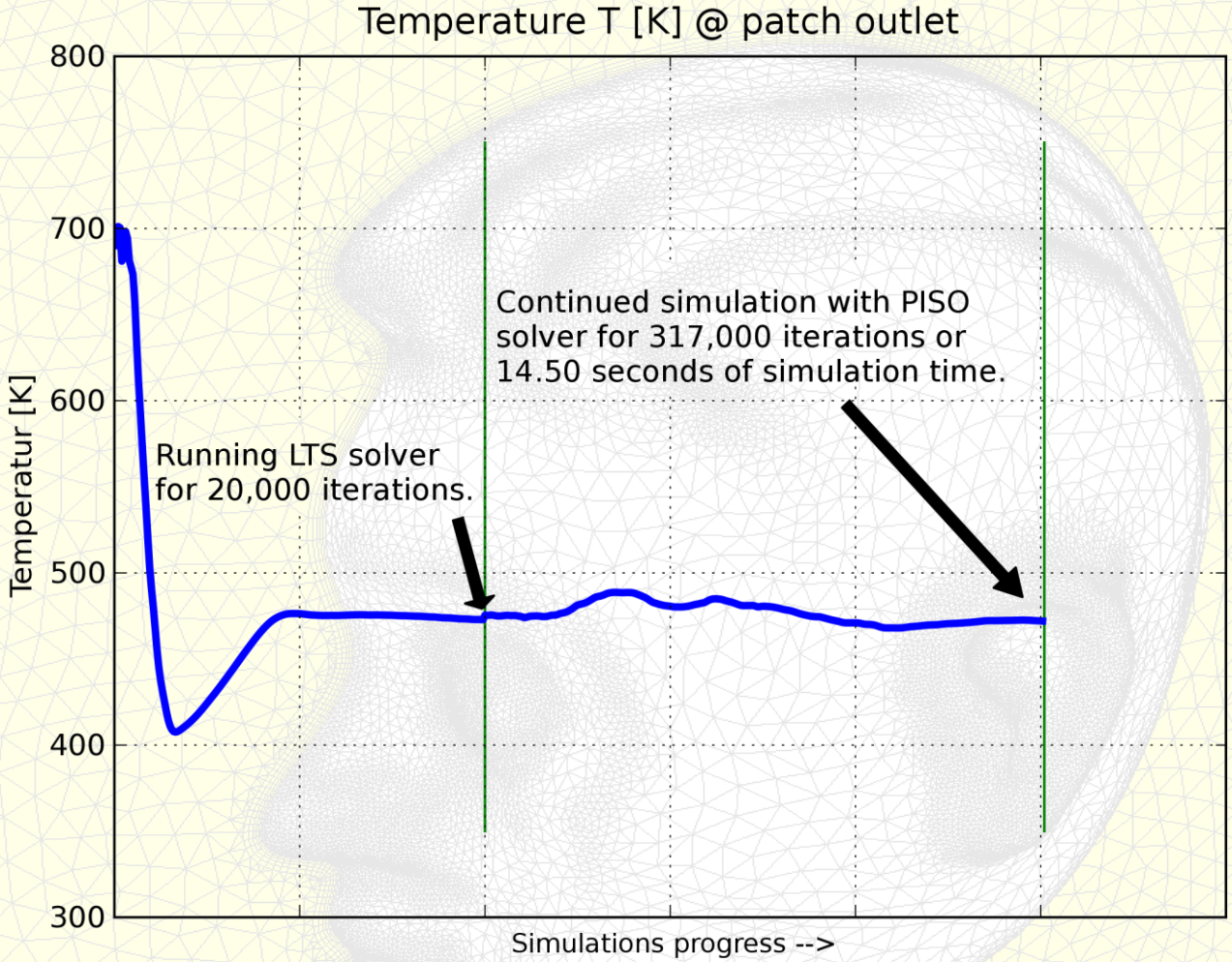

Development of temperature at the outlet patch.

Computational times

Mesh type	#Cells	LTS-Solver	PISO-Solver	t_LTS/t_PISO
Simplified Quench **2D Wedge**	~1,000	600s 10 min	10620s 02:57 h	<6%
Simplified Quench **3D Hexahedral**	~10,000	1750s 30 min	48510s 13:28 h	<4%
Complete Quench **Hybrid Mesh**	~2,600,000	3 days	Estimation: 1 year	
Complete Quench **Hybrid Mesh**	~2,600,000	3 days	**Continued for 14.5s: 35 days**	

Conclusion

Local Time Stepping…

… can reduce the computational time significantly

… can be used with particle tracking

… does not provide perfect visualization data

… can be combined with PISO-/PIMPLE based solver to:

- Overcome visualization handicap
- Verify the reach of steady state

Solver and test cases

- dhcaeLTSThermoParcelSolver,
- test cases for the simplified quenching device,
  - for dhcaeLTSThermoParcelSolver and
  - for PISO/PIMPLE based reactingParcelFoam
- and documentation is provided at:

http://www.dhcae-tools.com

Thank you for your attention!