CastNet:

Modeling platform for open source solver technology

DHCAE Tools GmbH

Address: Friedrich-Ebert-Str. 368, 47800 Krefeld, Germany / Company site: Alte Rather Str. 207 / 47802 Krefeld

Phone +49 2151 9490200/ Fax: +49 2151 9490209

Website: www.dhcae-tools.com email: info@dhcae-tools.de

.

CastNet concept and workflow

CastNet is a modeling platform for open source solvers. CastNet supports the CFD toolbox OpenFOAM® and CalculiX for finite element structural analysis. CastNet is designed for standard Linux releases of the solvers as well as ports for Windows.

The outstanding features of the CastNet modeling environment are:

- Supporting a flexible and complete simulation environment for CFD and FEA on Windows and Linux operating systems including pre-processing, solving and post-processing
- Providing access to reliable, stable and high quality CFD and FEA-meshing based on CAD geometry
- Establishing a complete GUI based environment: Access to strong open source solver capabilities without editing text files or detailed knowledge of the keyword-structure
- Reducing time from CAD model to ready-to-run case
- Allowing a reliable and stable CFD and FEA analysis by detailed job control

The following chart demonstrates the typical workflow from CAD to results with OpenFOAM® using the CastNet modeling environment:

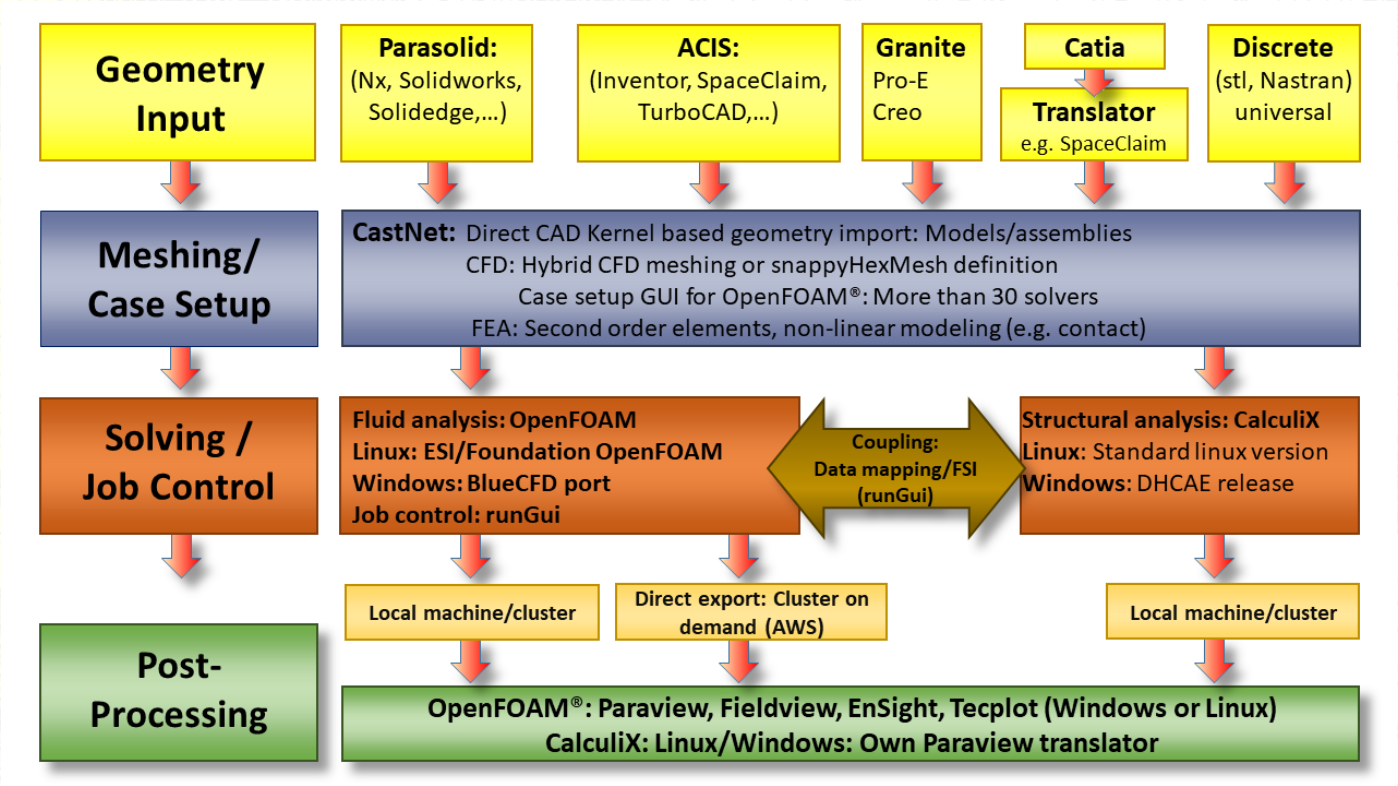

CAD model based input

CastNet allows a high quality geometry import based on CAD kernel data. There is no need to repair the CAD geometry and volume information is preserved. The CAD import includes:

- Direct access to Parasolid, ACIS and Granite (ProE/Creo) parts and assemblies.
- CastNet generates internally a non-manifold model of complex assemblies resulting in conformal grids between the various regions (parts). This feature simplifies the case setup for region models, e.g. Porous, MRF, AMI rotating, CHT. Also different meshing approaches (e.g. free or extrude meshes) can be setup in the regions.
- Automated geometry improvement for meshing by suppression of sliver faces if needed.

The meshing and case setup GUI

The complete case setup including mesh definition, OpenFOAM® solver setup and boundary conditions is done in a single graphical user interface.

Mesh specifications and OpenFOAM® settings (e.g. the velocity inlet conditions in the figure below) are defined with associations to the CAD geometry. The complete case definition is stored in a single data file. Settings can be modified easily by re-opening the attributes and defining new parameters. Changing a flow rate for OpenFOAM® or refining the mesh locally is carried out with a few clicks.

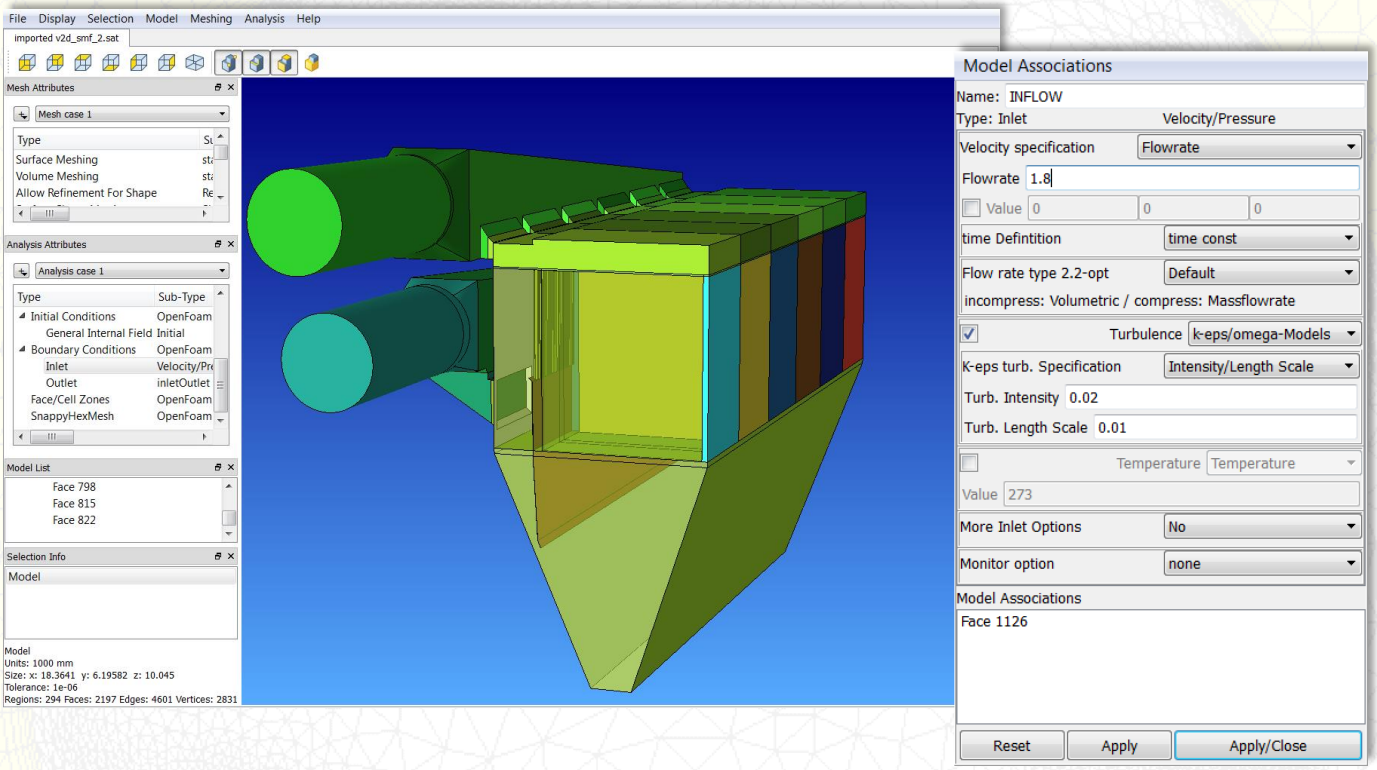

Meshing

CastNet supports two meshing approaches:

- The internal hybrid meshing with extrude meshes, free meshes and strong boundary layer capabilities and
- the external meshing with snappyHexMesh.

Both meshing approaches complement each other perfectly: Hybrid meshing is preferred when near wall effects are very important or a good geometry resolution is required. Stretched domains can be effectively meshed using extrude grids in CastNet's hybrid meshing approach. snappyHexMesh meshes with polyhedral cells are the preferred choice for free surface flows, time critical transient applications or very bad CAD input.

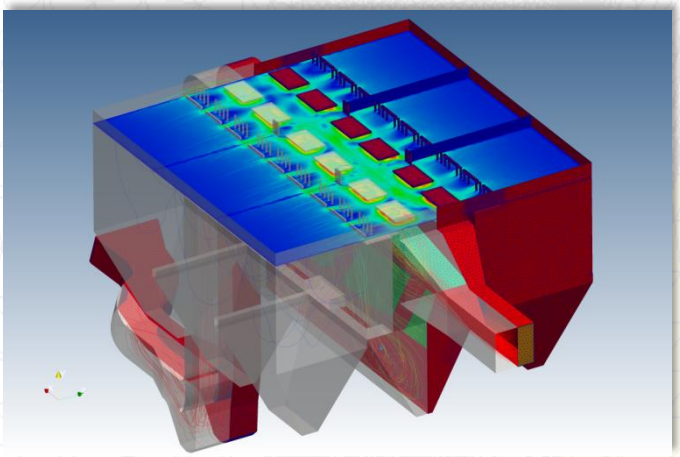

CAD model based meshing and case setup: Reliable CFD with CastNet and OpenFOAM® for a complex geometry

For structural mechanics applications, CastNet provides high-quality second order elements which are essential for a reliable structural analysis.

The mesh setup is strongly simplified by specific templates for each application and meshing task.

CastNet hybrid meshing

In hybrid meshing CastNet generates tetrahedral or hexahedral (Hex-core) cells, combined with prisms in boundary layer regions and structured meshes (e.g. in extrude regions). The particular features in this meshing approach are:

- Fast and high-quality mesh generation using relative element sizes and curvature control parameters
- Efficient mesh setup by combinations of extrudes and free meshes
- Full mesh control by means of local meshing parameters (element sizes, refinement boxes, boundary layer sizes)
- High mesh quality with excellent solution behavior with Hex-core meshes

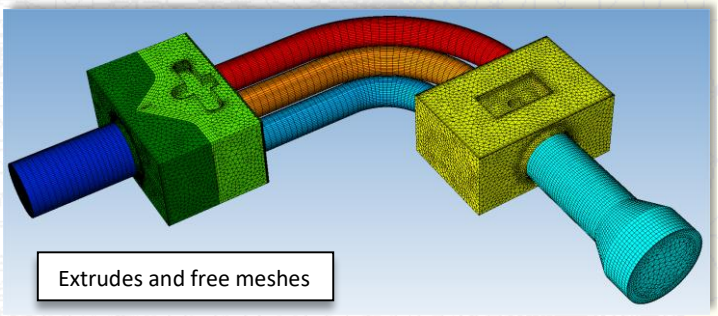

Mesh changes are quickly carried out: Changing the boundary layer thickness or setting refinement zones takes just one click.

Additionally CastNet provides advanced boundary layer features:

- Different types of boundary layer, e.g. first layer thickness, number of layer relative size, etc.
- Blend options
- Single sided boundary layer for interior meshes (baffle faces, solid zones in CHT analysis)

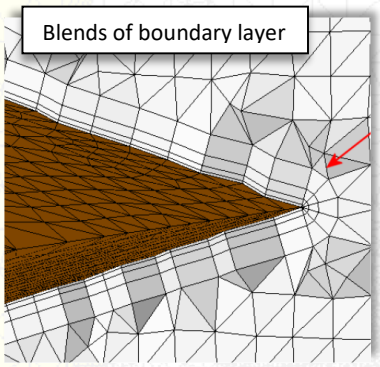

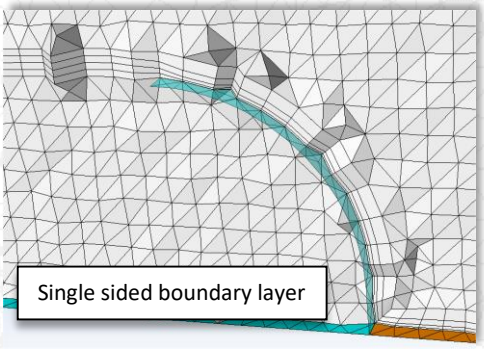

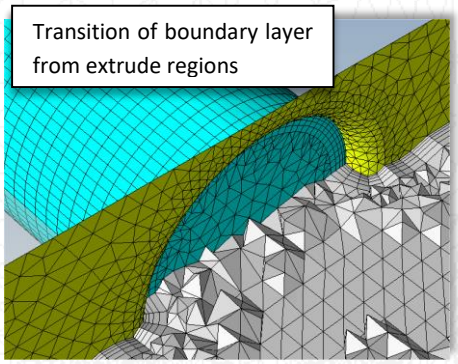

CastNet meshing features allow easy access to advanced OpenFOAM® functionality. These are in particular: Fan and baffle faces, regions (porous, MRF, AMI, CHT) and cyclic patches. Furthermore CastNet provides a special mesh improver for OpenFOAM® quality criteria. This results in an improved non-orthogonality of hybrid meshes.

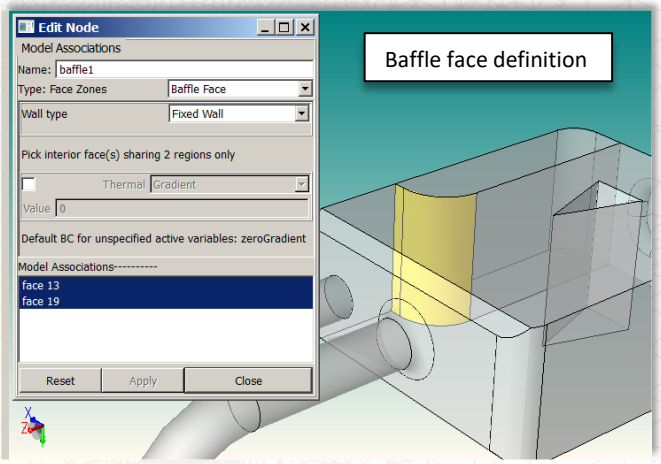

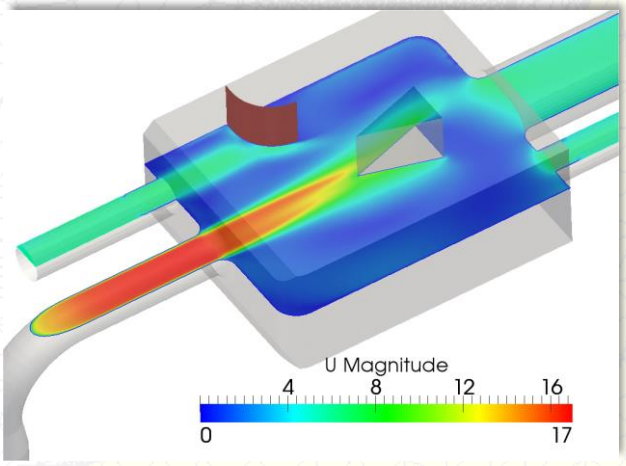

snappyHexMesh support in CastNet

Additionally to the hybrid meshing approach, CastNet supports snappyHexMesh, the script based meshing system in OpenFOAM®. The meshing setup for snappyHexMesh is strongly simplified compared to editing text files manually. CastNet directly exports the snappyHexMesh dictionary, based on the GUI settings and CAD model selections. The meshing process is incorporated into the automated case setup of the complete OpenFOAM® case. The entire meshing and case setup is performed in the background. The following features are supported:

- Region support (e.g. porous or MRF) based on CAD geometry
- AMI support for sliding meshes (e.g. for mixer or turbo machinery)
- Feature edges with automated feature extraction
- Face and region refinement
- Boundary layer meshing
- CFD domain generation based on solid region input

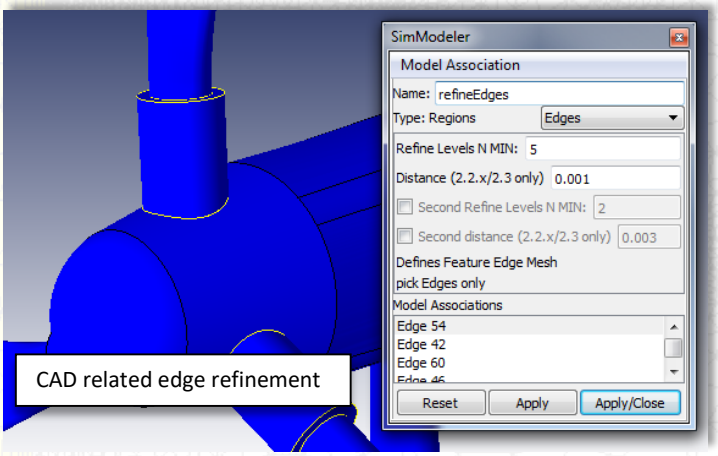

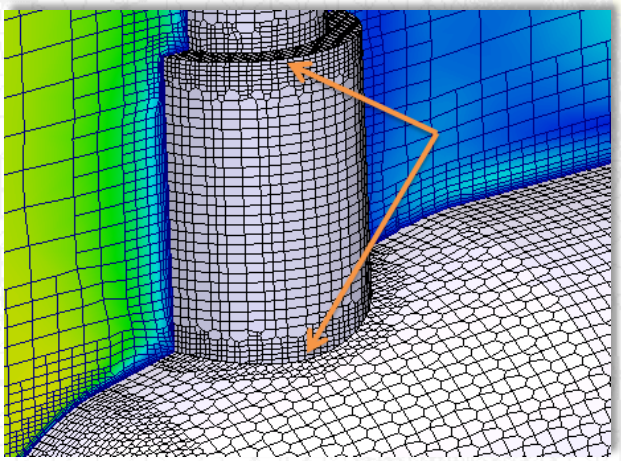

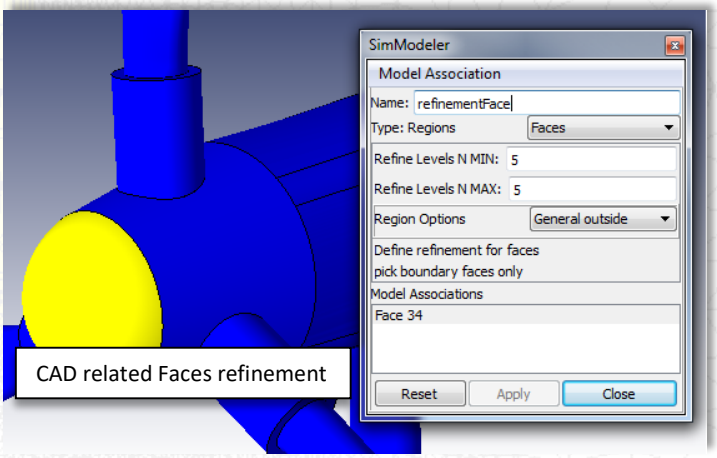

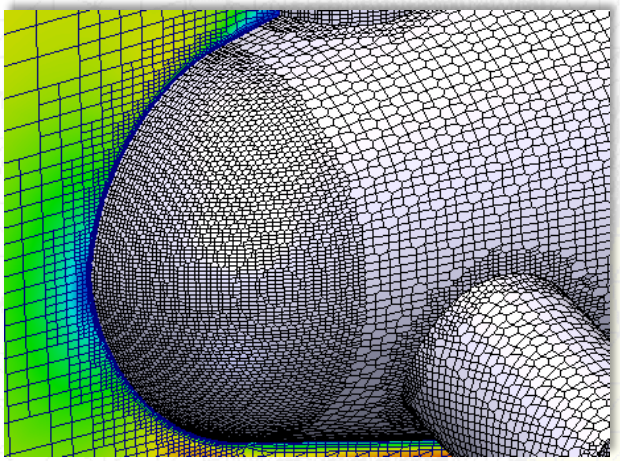

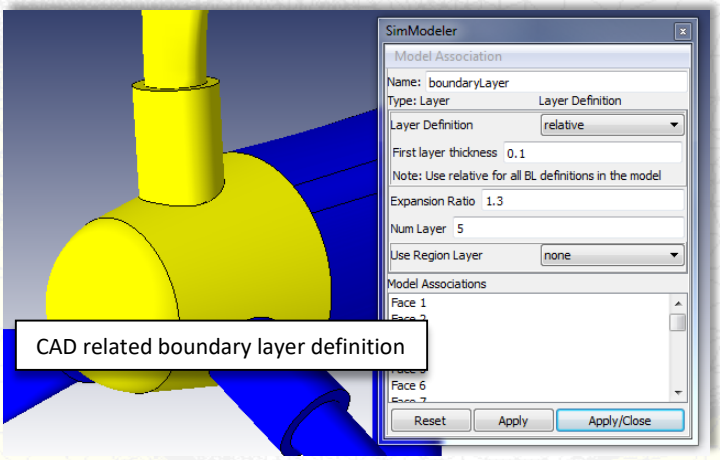

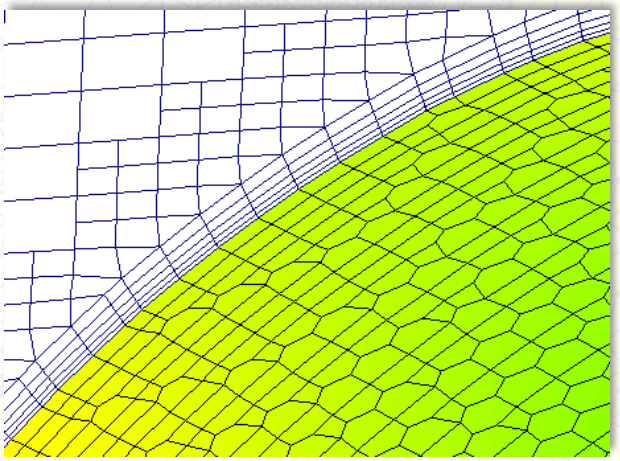

OpenFOAM® support in CastNet

CastNet supports a wide range of OpenFOAM® version provided by OpenCFD (ESI) or OpenFOAM-Foundation for-Linux and current BlueCFD Windows ports.

CastNet offers access to the following solver directly:

Incompressible solvers: simpleFoam, MRFSimpleFoam, porousSimpleFoam, pisoFoam, pimpleFoam, pimpleDyMFoam, SRFSimpleFoam, SRFPimpleFoam, icoFoam, nonNewtonianIcoFoam

Compressible solvers: rhoSimpleFoam, rhoSimplecFoam, rhoPimpleFoam, rhoPorousMRFPimpleFoam, rhoPorousMRFSimpleFoam, rhoPorousMRFLTSPimpleFoam, rhoPimplecFoam, rhoPimpleDyMFoam, sonicFoam

Heat transfer: buoyantSimpleFoam, buoyantPimpleFoam, buoyantSimpleRadiationFoam, buoyantBoussinesqSimpleFoam, buoyantBoussinesqPimpleFoam, chtMultiRegionSimpleFoam, chtMultiRegionFoam

Multiphase: interFoam, interDyMFoam, compressibleInterFoam, MRFInterFoam, porousInterFoam, LTSInterFoam, twoLiquidMixingFoam, bubbleFoam

Basic: laplacianFoam

Lagrangian (ico)uncoupledKinematicParcelFoam, simpleReactingParcelFoam, (LTS)reactingParcelFoam

Combustion: reactingFoam, LTSReactingFoam

These solvers include the following modeling capabilities:

- Steady-state/transient analysis
- compressible or incompressible flows and media
- With or without heat transfer including radiation, buoyancy and combustion
- Multiphase flow (VOF/Euler-Euler/Lagrangian particle tracking)
- Dynamic meshes (sliding meshes or sloshing applications)
- Conjugate heat transfer analysis

CastNet provides a strong user support for OpenFOAM® during the case setup:

- The case setup is strongly simplified by solver templates to each application.
- CastNet gives warnings if certain settings are missing or do not agree with the standard OpenFOAM® solver requirements. If e.g. gravity is required by the selected solver but the definition is missing, a warning will appear.
- CastNet defines the boundary by patch, not by field. There is no need for the user to define zero gradient conditions or special wall conditions for all fields explicitly.
- CastNet helps the user with many defaults in the background. CastNet selects e.g. the thermo-class automatically or sets up valid time loop parameters for the chosen solver. These defaults can be modified by the user in a configuration file.

Beside the standard solvers the user can also define solution settings and boundary conditions for custom solvers and custom fields. The CastNet output is fully compatible with standard OpenFOAM® releases. Therefore the user can extend the output manually for own developments or not supported features.

Further CastNet functionalities for OpenFOAM® usage are:

- Simple configuration of settings for parallel runs
- Probes definition and post-processing output options
- Fully automated setup for conjugate heat transfer and sliding mesh applications
- Convenient definition of boundary conditions using derived OpenFOAM® patches
- Easy and stable initialization with potentialFoam before the final run
- Definition of local initial conditions, e.g. specification of volume fractions in particular regions
- Support of baffle faces, fan faces, cyclic boundary conditions and two-dimensional modeling
- Time dependent boundary conditions and support of groovyBC
- Definition for incompressible (Newtonian/Non-Newtonian), multiphase or thermophysical materials
- Second solver run for particle tracking

CastNet CalculiX support

CalculiX is a non-linear structural solver developed at MTU. CalculiX was originally developed on Linux as an open source system. CastNet supports the original Linux version and DHCAE's CalculiX port for Windows. DHCAE's result data conversion tool to Paraview is shipped with RunGui for Linux and Windows.

In structural mechanics with CalculiX CastNet supports:

- Linear and non-linear statics/dynamics including non-linear effects:
  - Non-linear geometry e.g. large displacement, contact
  - Non-linear material e.g. plasticity, hyper elasticity
- Linear frequency analysis
- Buckling
- Heat-transfer analysis

Using CalculiX, a wide number of boundary conditions and loads are available such as fixations, prescribed displacements, concentrated and distributed surface or volume loads.

Furthermore a coupling with CFD results is available:

- Pressure distributions estimated in OpenFOAM® can be transferred to CalculiX as surface load.
- Volume temperature fields from a conjugate heat transfer analysis can be transferred from a solid OpenFOAM® region to CalculiX volume. By this, thermal stresses and displacements can be calculated in CalculiX.
- Furthermore a fully coupled iterative fluid-structure-interaction coupling between OpenFOAM and CalculiX is available as additional tool for static applications.

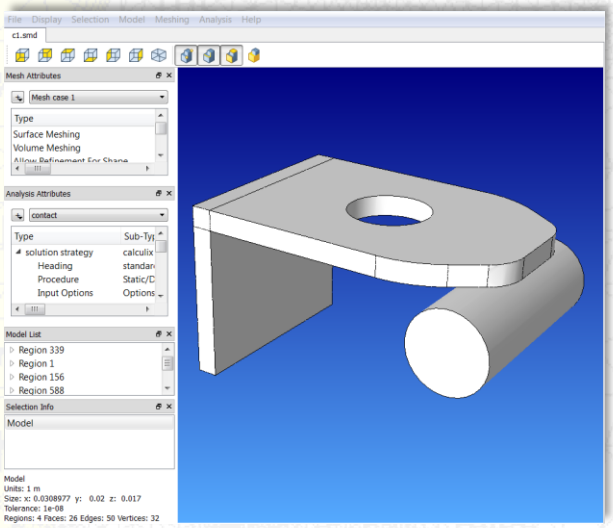

Contact analysis defined in CastNet

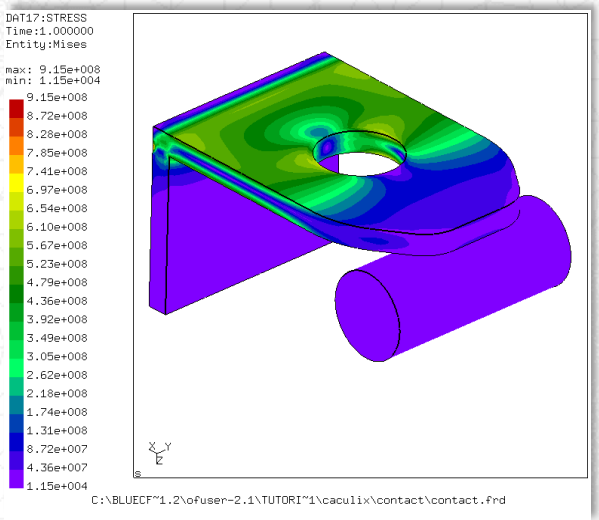

Calculated with CalculiX and visualized with CGX

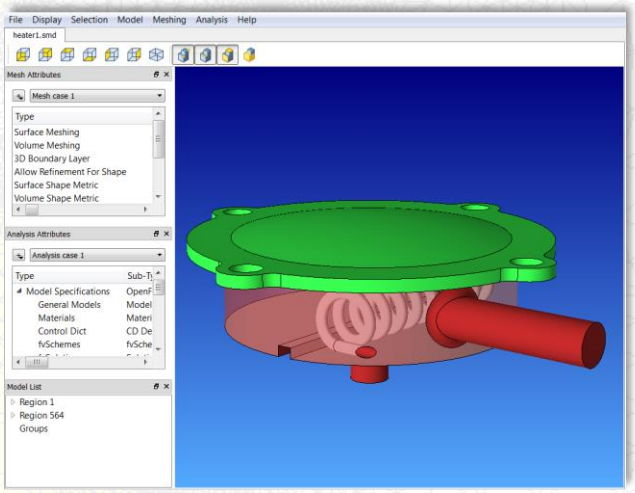

CFD/FEA analysis for thermal stresses defined in CastNet

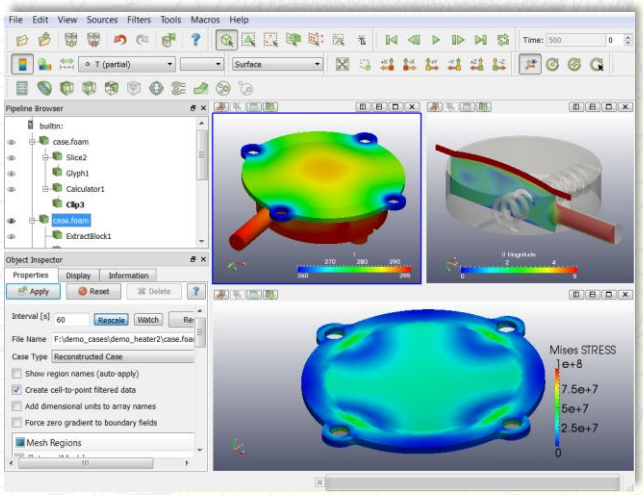

On Windows: Post-processing can be performed for both analyses at the same time.

Job control system for OpenFOAM®: runGui

runGui is a job control system for OpenFOAM®. It completes the GUI based environment with modifications of solver settings during runtime. The major tasks for runGui are:

- To enable a reliable CFD analysis by a detailed job control.
- To facilitate the usage of OpenFOAM® features such as modifying solution settings during runtime.
- To provide easy access to OpenFOAM® meshing, pre- and post-processing features.
- To allow an easy exchange of data between CalculiX and OpenFOAM®.
- To provide the DHCAE's port of the CalculiX-solver on Windows and data-translators for CalculiX results to Paraview for Linux and Windows.

These goals are reached by the following outstanding features:

- One-click button for case setup from the CastNet output
- Job control by automated residual and probes plots controlled by CastNet settings
- Modifying solver settings during the run, e.g. by changing schemes and solution settings without stopping the solver
- GUI based OpenFOAM® features:
    - Mesh manipulations such as mesh extrusion, mesh scaling and wall refinement
    - mapFields: Mapping of results from one case to another
    - Wall results such as wall shear stress, YPlus-values, etc.